ESSENTIALS®

ASSEMBLY MANUAL
SOULLMATE BENCH

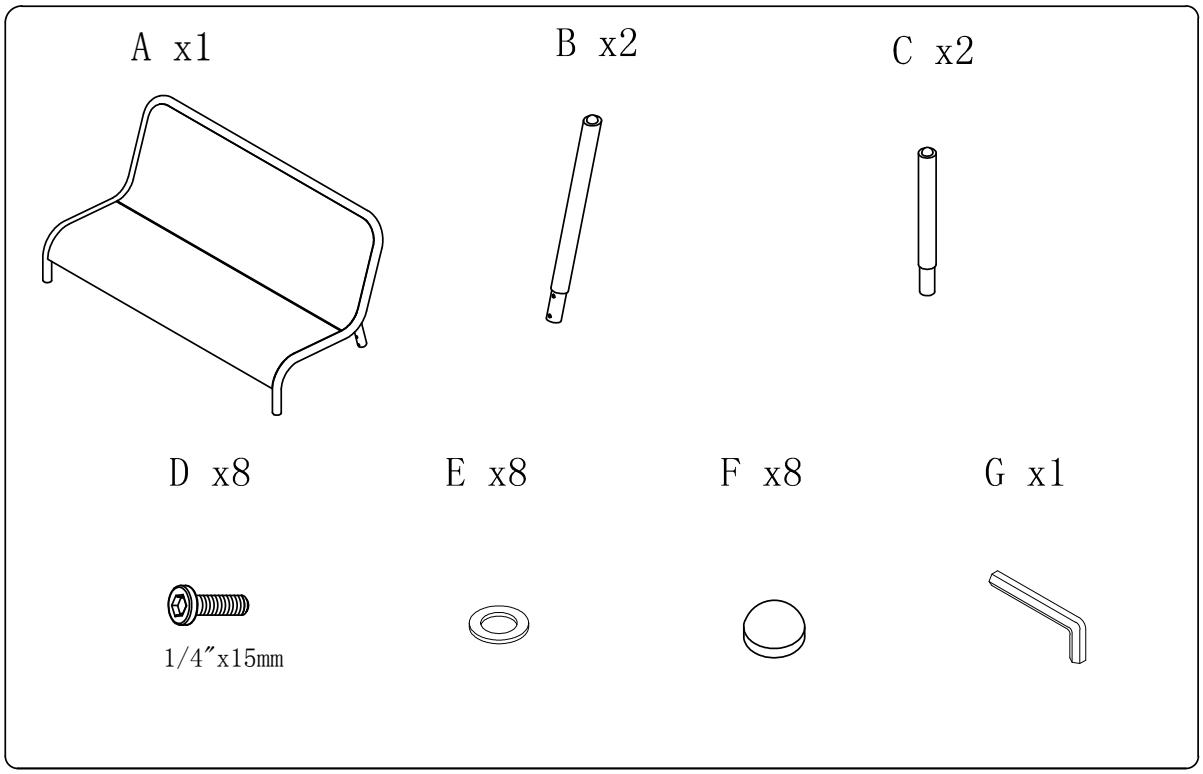

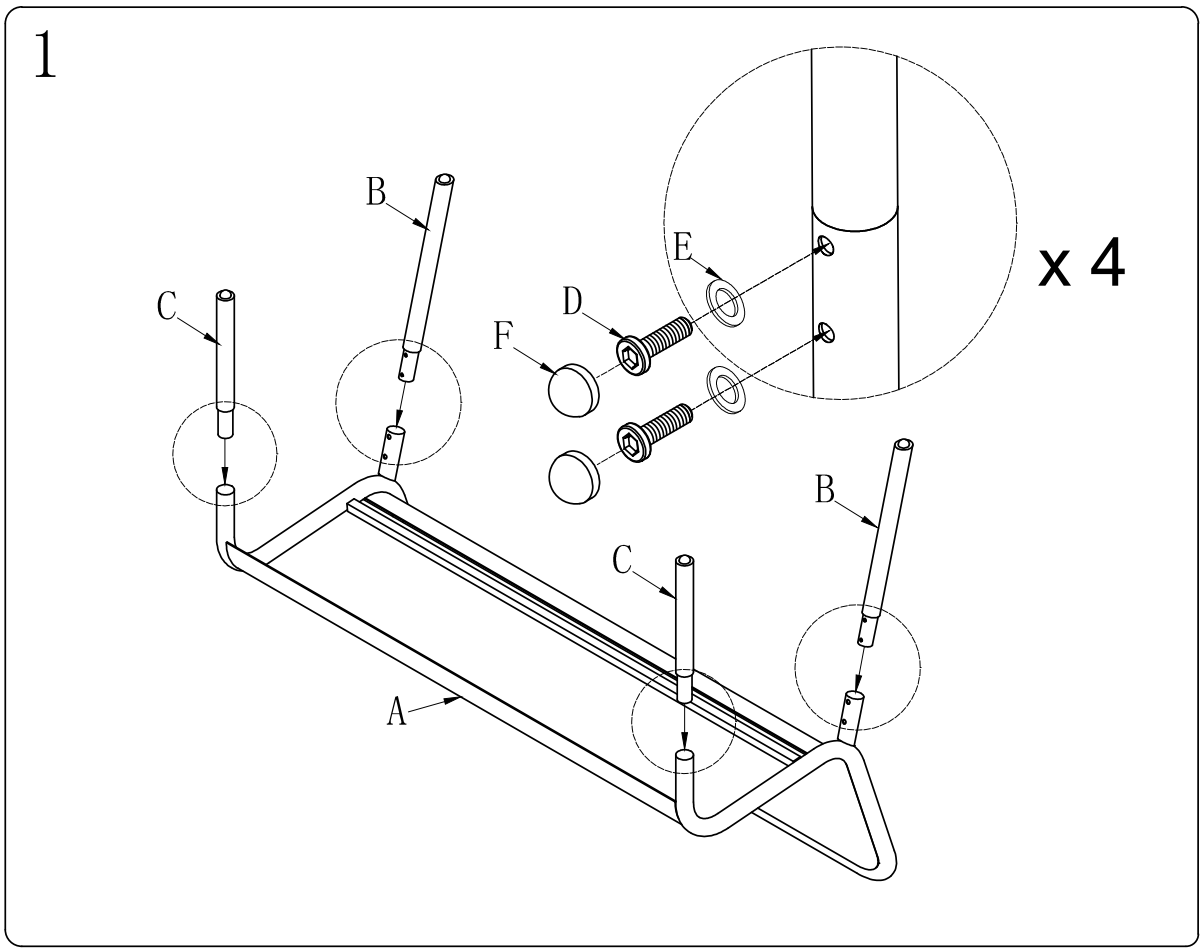
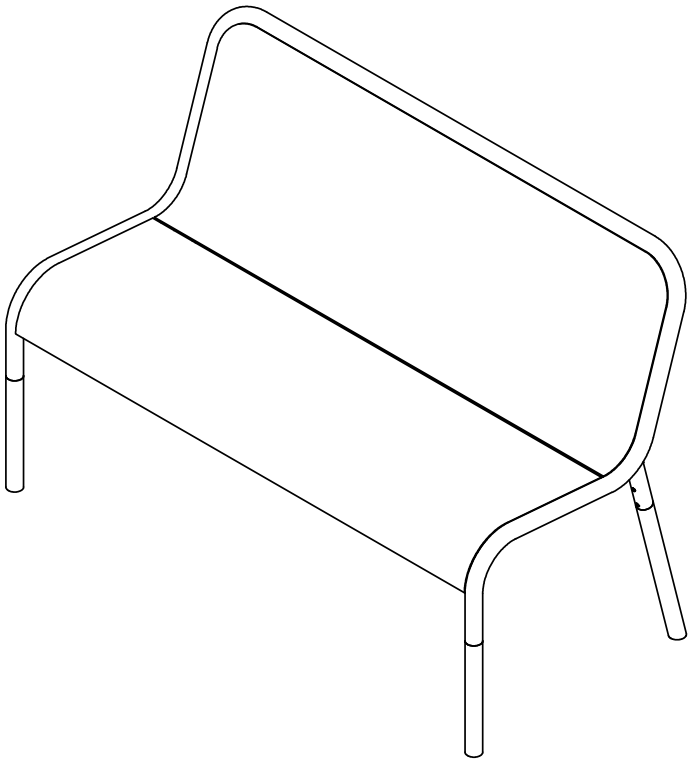
2